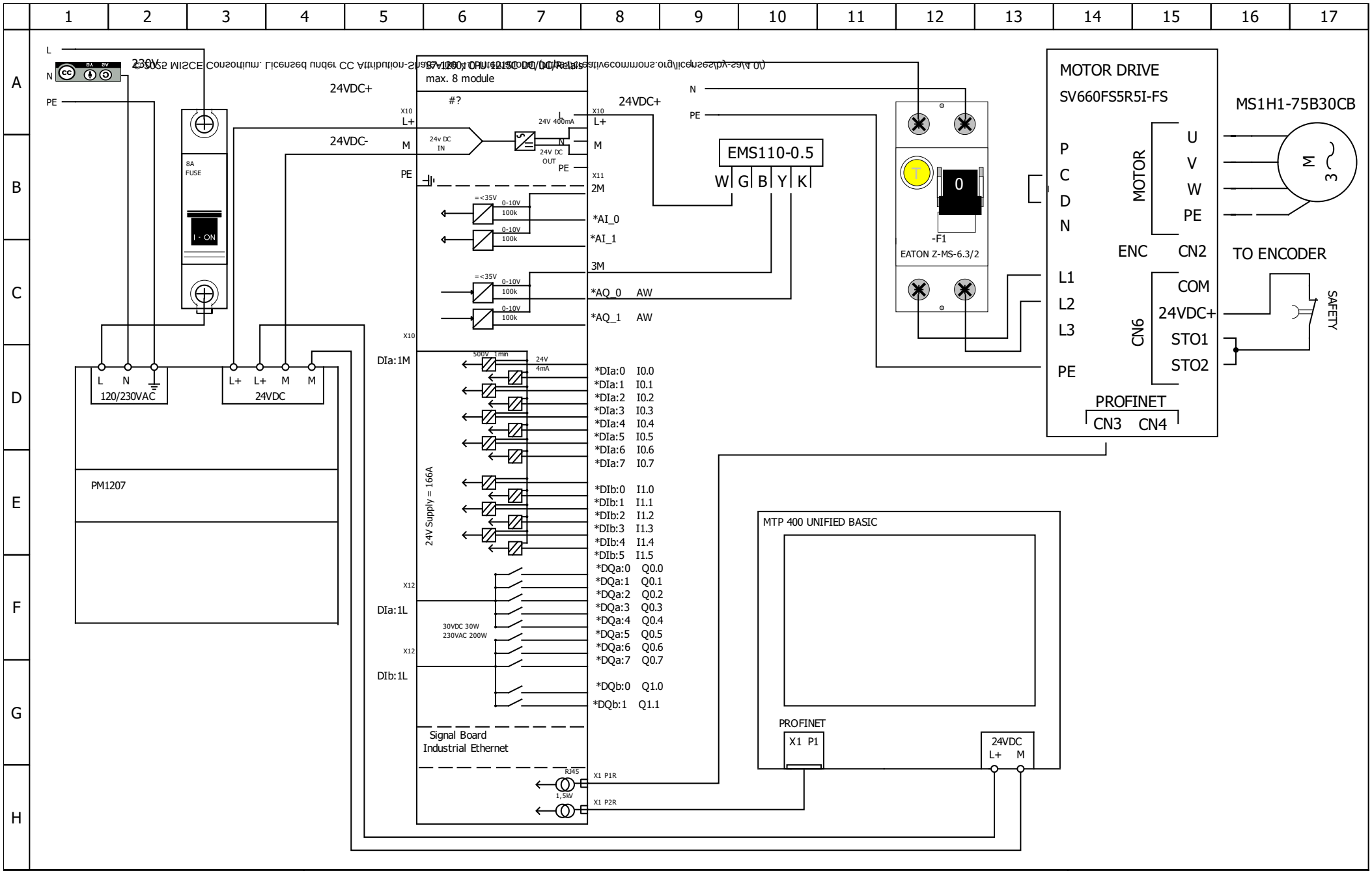

Author: PRz	Burnisher Electrical Schematics	File:
Date:		Folio: 1/1